DENIA® STOVES

KYOTO EcoDesign

MEASURES

DIMENSIONS H x W x D	1147x514x460mm
GROSS/NET WEIGHT	151/137 kg
FIREWOOD ENTRANCE	310x565 mm
SMOKE FLUE	Ø 150-153 mm Top
EXTERNAL AIR INTAKE	Ø 80 mm

CHARACTERISTICS

CAST IRON GRILL	
PANORAMIC VISION	
STEEL BODY SHEET	5 mm
NOMINAL HEAT OUTPUT	8 KW
EFFICIENCY	78 %
CO EMISSIONS	0,10%
HEAT RESISTANT PAINT	800ºC
CERAMIC GLASS HEAT RESISTANCE	750ºC

PRODUCT PLUS

ECODESIGN 2022

EXTERNAL AIR INTAKE

VERMICULITE LINING

WOOD LOGS 50 CM

250 m³ HEATING VOLUME

DOUBLE COMBUSTION

CLEAN GLASS SYSTEM

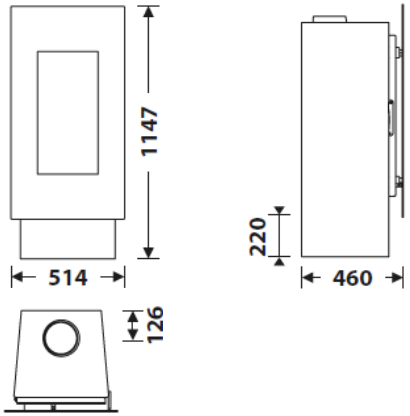

EAN 8426964116205
REF. 11620

EcoDesign2022

flamme VERTE Le label du chauffage au bois 7★

TÜVRheinland CERT ISO 9001

CE

BImSchV2

VKF AEAI