TAHOE PANADERO

TAHOE EN

MEASURES

DIMENSIONS H x W x D	**840x629x402 mm**
GROSS/NET WEIGHT	**120/110 kg**
FIREWOOD ENTRANCE	**390x350 mm**
SMOKE FLUE	**Ø 150-153 mm Top**

CHARACTERISTICS

CAST IRON GRILL	
STEEL BODY SHEET	**5 mm**
NOMINAL HEAT OUTPUT	**6,7 KW**
EFFICIENCY	**80,7 %**
CO EMISSIONS	**0,12 %**
HEAT RESISTANT PAINT	**800ºC**
CERAMIC GLASS HEAT RESISTANCE	**750ºC**

EAN 8426964482058
REF. PANADERO 48205

PRODUCT PLUS

ECODESIGN

EXTERNAL AIR INTAKE

- 200 m³ — HEATING VOLUME
- V — VERMICULITE LINING
- CLEAN GLASS SYSTEM
- DOBLE COMBUSTION
- WOOD LOGS 50 CM
- WOOD LOG STORAGE
- DOUBLE LOCK

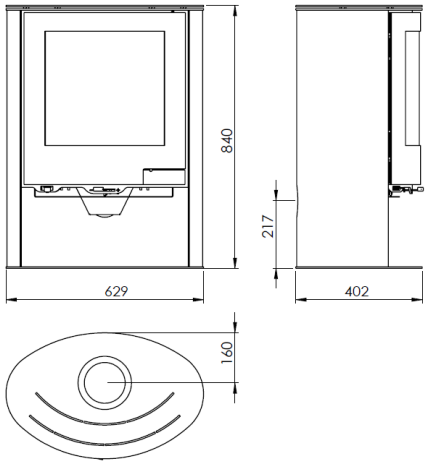

EcoDesign

A+

WARRANTY 5 YEARS WARRANTY

flamme VERTE 7 ★